FOR OFFICIAL USE

N5

National Qualifications 2023

Mark

X823/75/01 Engineering Science

TUESDAY, 16 MAY

1:00 PM – 2:50 PM

X823750 1

Fill in these boxes and read what is printed below.

Full name of centre

Town

Forename(s)

Surname

Number of seat

Date of birth

Day Month Year

Scottish candidate number

Total marks — 110

SECTION 1 — 20 marks
Attempt ALL questions.

SECTION 2 — 90 marks
Attempt ALL questions.

Show all working and units where appropriate.
You should refer to the National 4/5 Engineering Science Data Booklet which you have been given.
The number of significant figures expressed in a final answer should be equivalent to the least significant data value given in the question. Answers that have two more figures or one less figure than this will be accepted.
Write your answers clearly in the spaces provided in this booklet. Additional space for answers is provided at the end of this booklet. If you use this space you must clearly identify the question number you are attempting.
Use **blue** or **black** ink.
Before leaving the examination room you must give this booklet to the Invigilator; if you do not, you may lose all the marks for this paper.

SQA ©

X823750101

MARKS | DO NOT WRITE IN THIS MARGIN

SECTION 1 — 20 marks

Attempt ALL questions

1. The parts of a doorbell, consisting of a button and speaker, are shown.

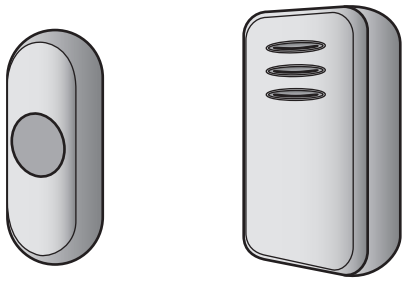

button speaker

(a) Complete the system diagram shown below for the doorbell by adding the missing output. **1**

The doorbell operates without the use of feedback.

(b) State the type of control that **uses** feedback. **1**

_____

MARKS | DO NOT WRITE IN THIS MARGIN

2. A child's game is shown.

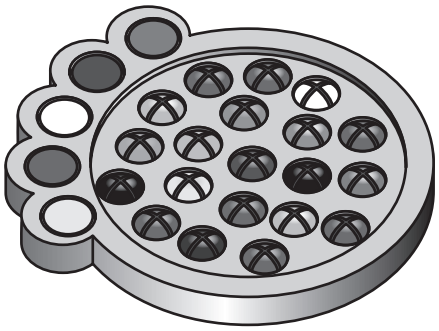

A diagram of the simple gear train inside the game is shown below.

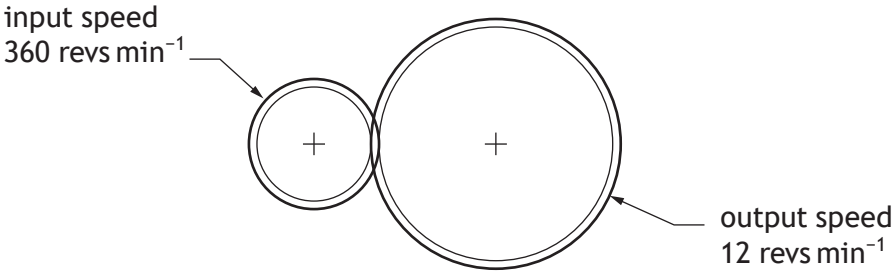

Calculate the velocity ratio of this simple gear train. **2**

[Turn over

3. A Boolean equation is shown.

$$A \bullet \overline{B} = Z$$

Draw the logic diagram for this Boolean equation. **2**

A ○

○ Z

B ○

4. A sign hanging from a supermarket ceiling is shown.

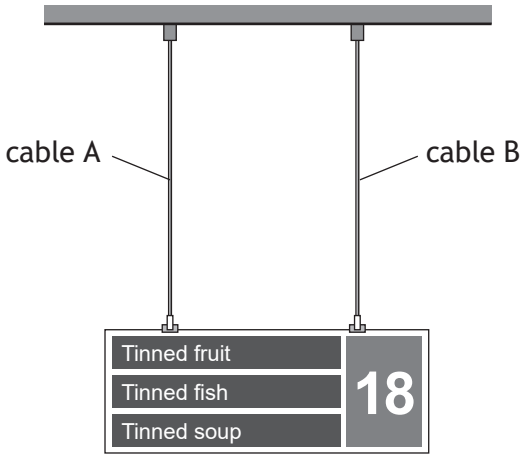

A free body diagram of the sign is to be drawn.

(a) Describe one piece of information that should be included on a free body diagram. **1**

_____

MARKS | DO NOT WRITE IN THIS MARGIN

4. (continued)

The sign hangs from the ceiling by two cables.

Cable A has an original length of 4.5 m and is stretched by 0.0013 m.

(b) Calculate the strain in cable A. **2**

(c) State the nature of the force in cable A. **1**

5. Part of a circuit is shown.

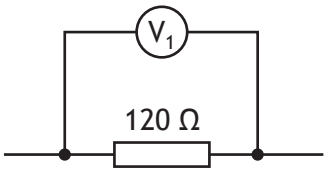

(a) Calculate the voltage V_1 across the 120 Ω resistor when the current flow is 0.0025 A. **2**

The 120 Ω resistor is replaced by one with a larger resistance.

(b) State the effect on the current if the voltage V_1 remains the same. **1**

[Turn over

MARKS | DO NOT WRITE IN THIS MARGIN

6. A drill uses a 1.5 A, 18 V rated battery.

(a) Calculate the electrical energy supplied by the battery when the drill is used for 160 seconds. **2**

Grease is used to lubricate the gear system within the drill.

(b) Describe a reason for lubricating the gear system. **1**

_____

_____

MARKS | DO NOT WRITE IN THIS MARGIN

7. A lamp in a child's night light will automatically switch on when the room is dark. The incomplete circuit diagram used to control the lamp is shown below.

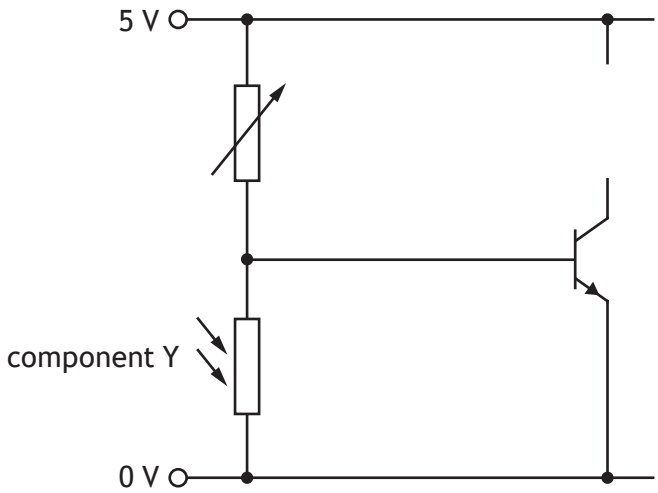

(a) Complete this circuit diagram by adding the symbol for the lamp. **1**

(b) State the **full** name of component Y in this circuit. **1**

_____

(c) Indicate, with a cross (X) on the circuit above, where an ammeter would be connected to measure the current flowing to the **base** connection of the transistor. **1**

(d) State the name of the component that could be used to protect the transistor from a large **input** current. **1**

_____

[Turn over

DO NOT WRITE IN THIS MARGIN

SECTION 2 — 90 marks

Attempt ALL questions

8. A car safety system detects when the driver's seatbelt is unfastened.

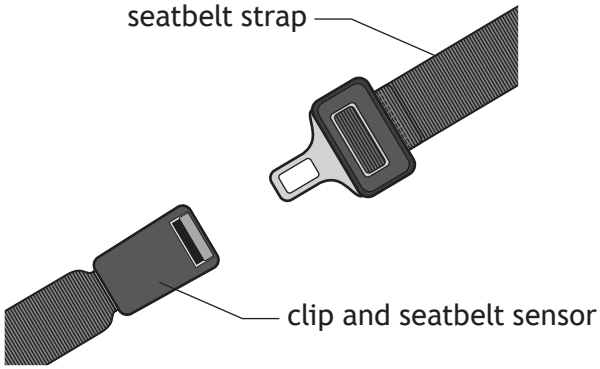

The safety system is operated by a microcontroller.

Input and output connections to the microcontroller are shown in the table below.

Input connections	Pin	Output connections
	7	warning lamp
	6	buzzer
seatbelt sensor	0	

The safety system operates using the following sequence:

- A warning lamp and a buzzer turn off.
- When the seatbelt sensor is on, the sequence will return to the start.
- If the seatbelt sensor is off, the warning lamp will turn on.
- The buzzer will then turn on and off three times over a total period of 1.8 seconds.
- The sequence will return to check the seatbelt sensor again.

8. (continued)

(a) Complete the flowchart for the sequence shown opposite, with reference to the Data Booklet and input/output connections.

Include **all** pin numbers and delay units in your flowchart. **10**

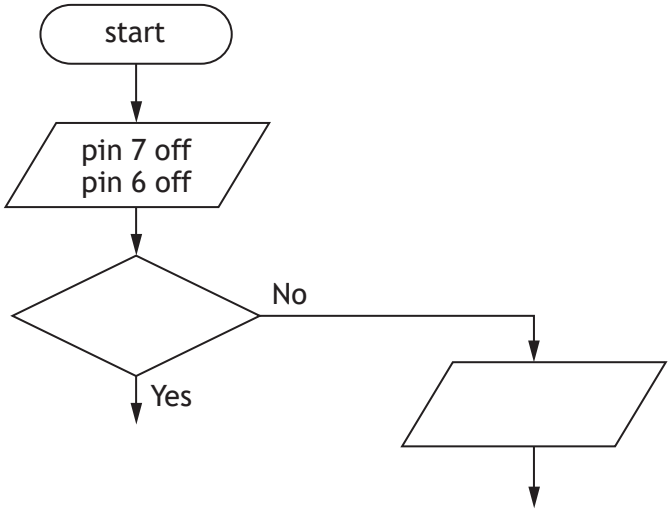

MARKS | DO NOT WRITE IN THIS MARGIN

8. (continued)

A force applied to the seatbelt strap results in a stress of 15 N mm^{-2}. The seatbelt strap has a cross-sectional area of 48 mm^2.

(b) Calculate the force applied. **3**

[Turn over for next question

DO NOT WRITE ON THIS PAGE

9. A pneumatic circuit is used to arrange bottles ready for packaging in a production line.

The pneumatic circuit used to arrange the bottles is shown below.

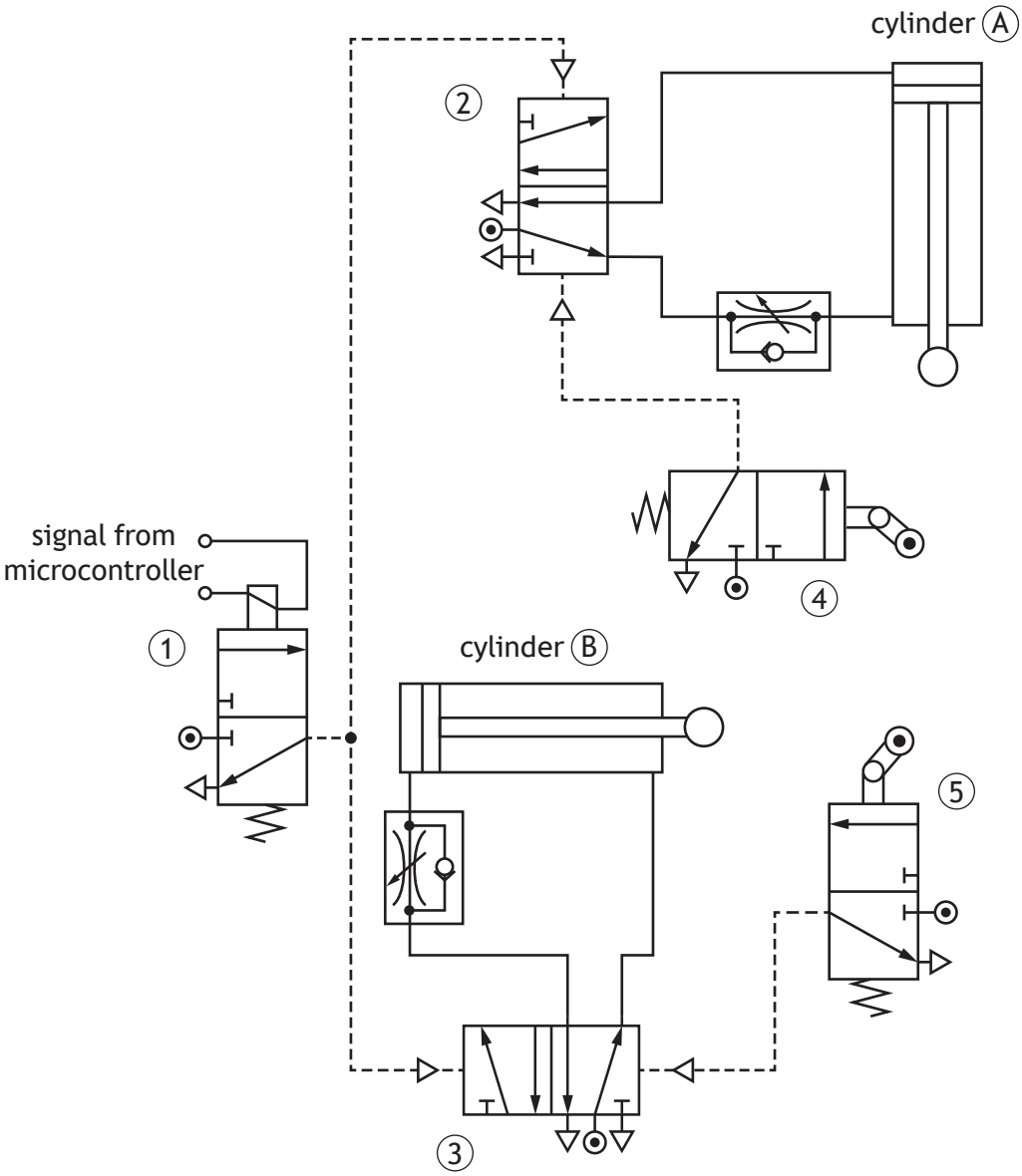

MARKS | DO NOT WRITE IN THIS MARGIN

9. (continued)

(a) Describe the operation of the circuit shown opposite. **5**

When a signal is received from the microcontroller . . .

[Turn over

MARKS | DO NOT WRITE IN THIS MARGIN

9. (continued)

Air at a pressure of 0.32 N mm^{-2} is supplied to cylinder Ⓑ. This results in an outstroking force of 620 N.

(b) (i) Calculate the area of the piston. **3**

(ii) Calculate the **diameter** of the piston. **3**

9. (continued)

A microcontroller based system is used to detect the bottles.

The program used to count six bottles is shown below.

line	program	
1	main:	let count = 0
2	check:	if input2 is off then check
3		let count = count + 1
4		if count = 6 then label_1
5		goto check
6	label_1:	switch on 7
7		pause 500
8		switch off 7
9		goto main

(c) State the **line number** that contains a time delay. **1**

An incomplete diagram for the microcontroller based system is shown below.

(d) Complete, with reference to the program above, the wiring of the bottle sensor and the transistor to the microcontroller. **2**

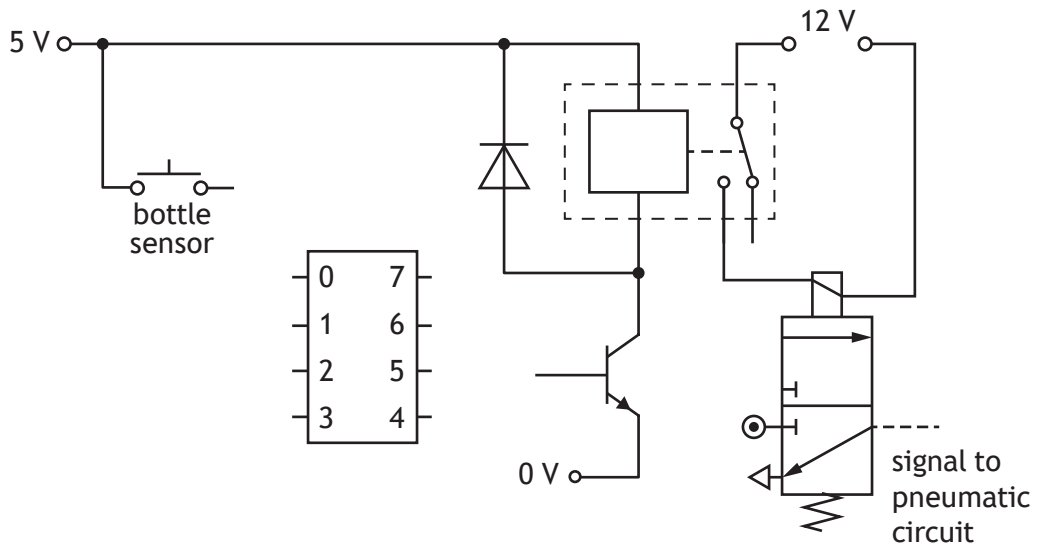

[Turn over

[BLANK PAGE]

DO NOT WRITE ON THIS PAGE

MARKS | DO NOT WRITE IN THIS MARGIN

10. A warning sign used on a road is shown.

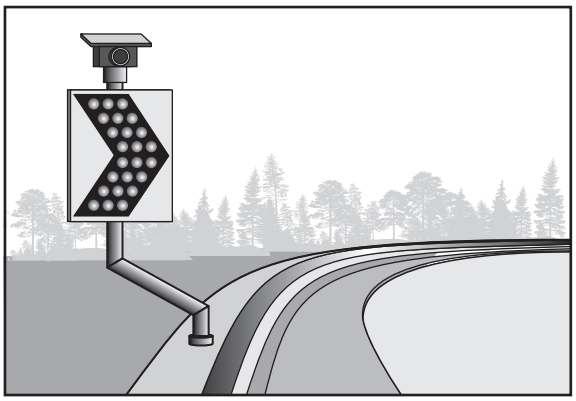

The warning sign uses a number of LEDs powered by solar energy.

(a) Describe a task an **electronic** engineer would complete when **designing** the warning sign. **1**

(b) Describe an **economic** impact of using LEDs instead of lamps in the warning sign. **1**

(c) Explain an impact on the **environment** of using solar powered LEDs in the warning sign. **2**

[Turn over

10. (continued)

Part of the circuit used in the warning sign is shown below.

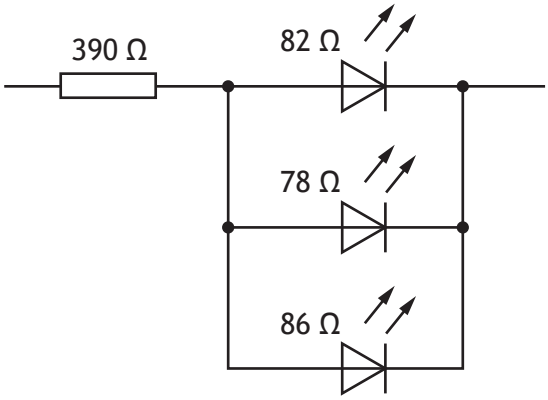

(d) (i) Calculate the resistance of the three LEDs in parallel. **3**

(ii) Calculate the total resistance of the circuit shown above. **1**

MARKS | DO NOT WRITE IN THIS MARGIN

10. (continued)

The warning sign is rated at 12 V, 1.8 W.

(e) Calculate the current supplied to the warning sign. **3**

[Turn over

MARKS | DO NOT WRITE IN THIS MARGIN

11. The mountain coaster shown below allows riders to travel downhill in an unpowered carriage. The rider can control the speed of the carriage by using a braking system.

A number of different engineers were involved during the development and construction of the mountain coaster.

(a) (i) Describe a task that a mechanical engineer would carry out during the **development** of the carriage. **1**

_____

_____

(ii) Describe a task that a civil engineer would carry out during the **development** of the mountain coaster. **1**

_____

_____

(iii) Describe a task that an environmental engineer would carry out during the **construction** of the track. **1**

_____

_____

MARKS | DO NOT WRITE IN THIS MARGIN

11. (continued)

At the start of the ride, 6.2 m above the ground, the carriage and rider have a combined potential energy of 13 kJ.

(b) (i) Calculate the combined mass of the carriage and rider. **3**

(ii) Calculate the kinetic energy of the carriage and rider when released and travelling at a velocity of 2.7 m s^{-1}. **2**

[Turn over

11. (continued)

A structural engineer analyses the forces acting through part of the support structure for the track.

A triangle of forces diagram used in the analysis is shown below.

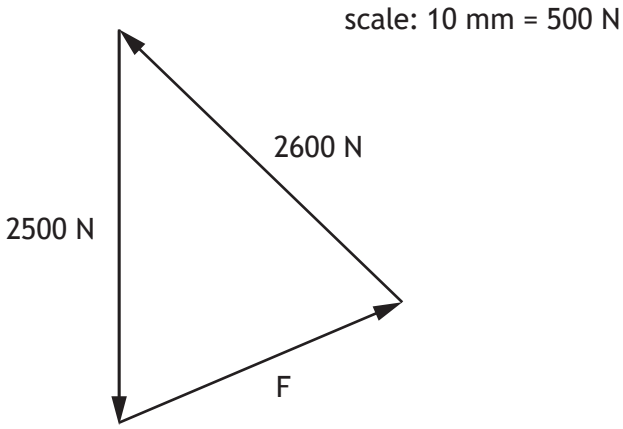

(c) Determine, with reference to the triangle of forces diagram, the size of unknown force F. **1**

F = _____ N

The properties of the four metals considered for the support structure are shown in the table below.

Metal	Corrosion resistant	Durability
A	no	low
B	yes	high
C	yes	low
D	no	high

(d) Select the most suitable metal (A–D) from the table above to be used for the support structure and justify your choice. **2**

Choice of metal _____

Justification _____

_____

_____

_____

MARKS | DO NOT WRITE IN THIS MARGIN

12. A washing machine is shown.

A sub-system diagram showing the control of the water temperature in the washing machine is shown below.

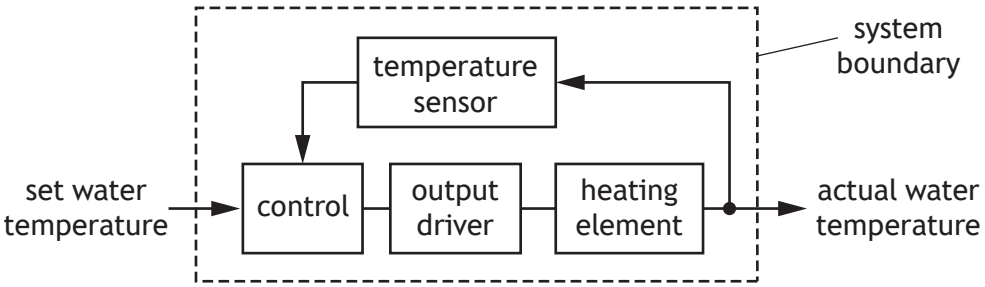

(a) Describe the reason for including a system boundary in a sub-system diagram. **1**

(b) Describe, with reference to the sub-system diagram above, the control of the water temperature. **3**

The water temperature is set . . .

12. (continued)

A thermistor is used in the temperature sensor.

The operating characteristics of six thermistors are shown on the graph below.

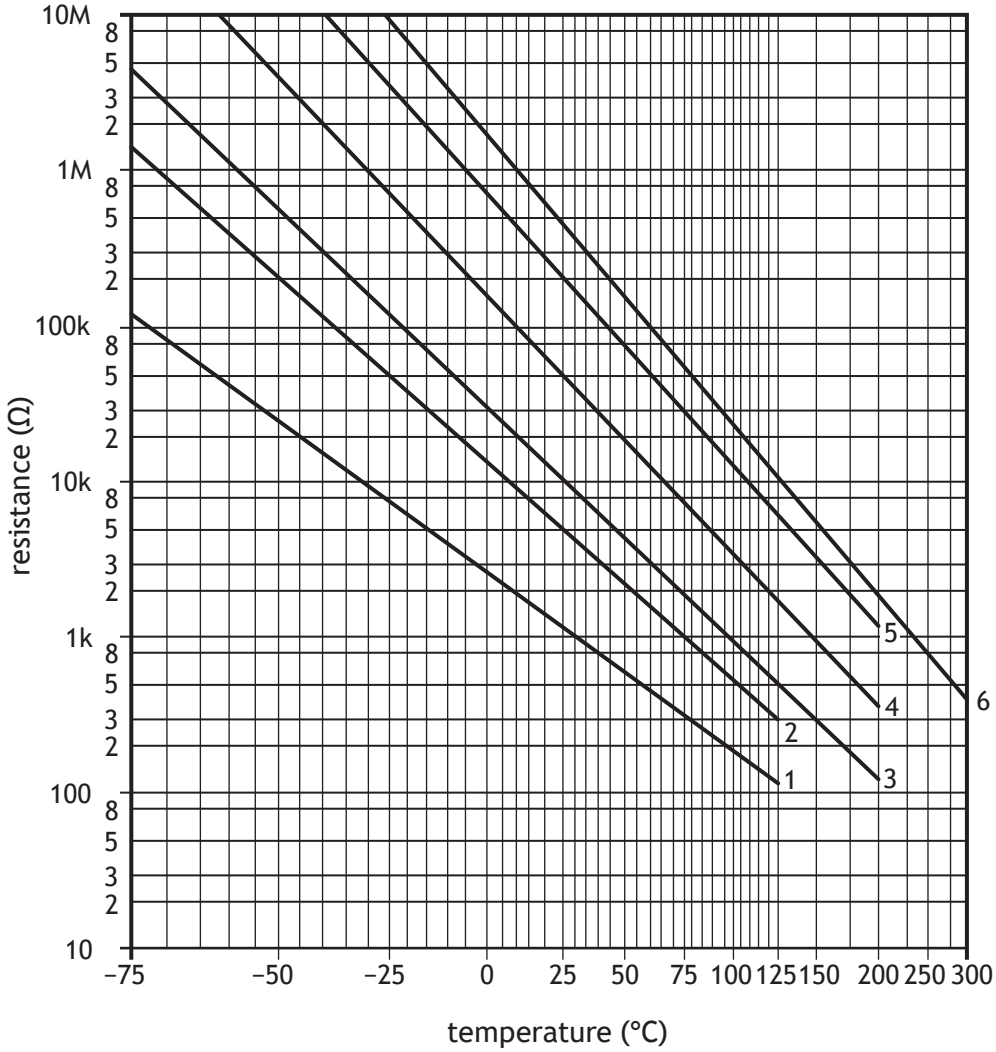

(c) State the thermistor **number** from the graph above that has a resistance of 1 kΩ when the temperature is 30 °C. **1**

_____

MARKS | DO NOT WRITE IN THIS MARGIN

12. (continued)

(d) Explain why using a low temperature wash cycle can affect **climate change**. **2**

The washing machine's heating element is tested using 8.6 kg of water.

(e) Calculate the heat energy when the water temperature is raised by 15 °C. **2**

[Turn over

12. (continued)

The logic diagram for part of a circuit used in the washing machine is shown.

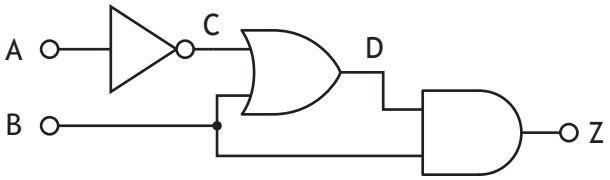

(f) Complete the truth table for this logic diagram. **3**

A	B	C	D	Z
0	0			
0	1			
1	0			
1	1			

The truth table for another logic circuit in the washing machine is shown below.

F	G	H	Y
0	0	0	0
0	0	1	0
0	1	0	0
0	1	1	0
1	0	0	0
1	0	1	1
1	1	0	1
1	1	1	0

(g) Complete the Boolean equation for output Y in terms of inputs F, G and H. **3**

Y = _____

[Turn over for next question

DO NOT WRITE ON THIS PAGE

13. A combine harvester used to gather crops is shown below.

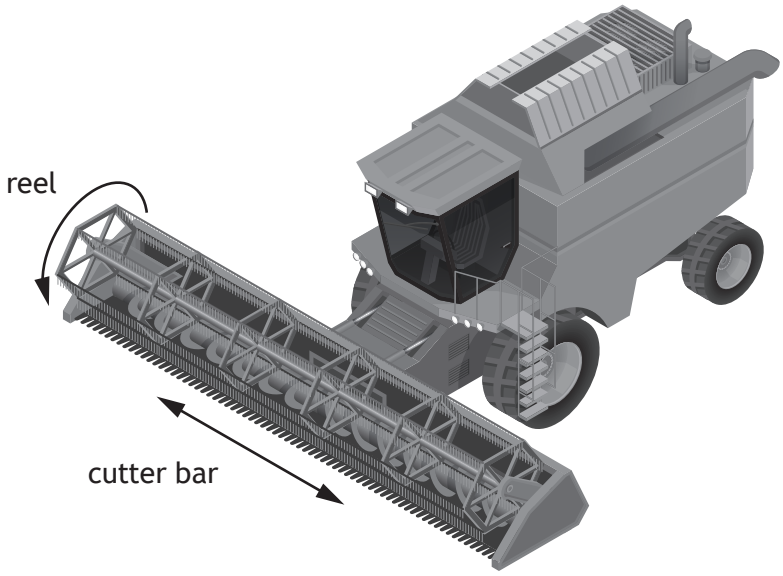

(a) State the type of motion shown above at the: **2**

reel _____

cutter bar _____

A simplified diagram for the combine harvester is shown.

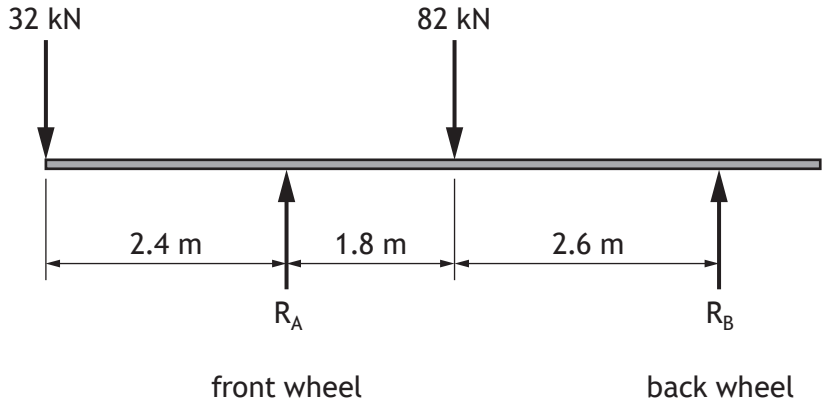

MARKS | DO NOT WRITE IN THIS MARGIN

13. (continued)

(b) (i) Calculate the reaction force R_A by taking moments about R_B. **3**

(ii) Calculate the reaction force R_B. **2**

[Turn over

13. (continued)

Part of a drive mechanism used in the combine harvester is shown.

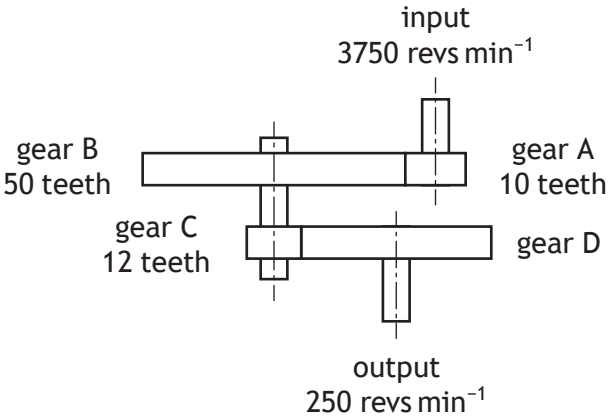

(c) Calculate the number of teeth on gear D. **4**

MARKS | DO NOT WRITE IN THIS MARGIN

13. (continued)

The combine harvester uses a Global Positioning System (GPS) when cutting the crop. This is an established technology.

An **emerging technology** is one that is new and still to be tried commercially within a product or system.

(d) Explain a possible impact of an **emerging technology** which you are familiar with. **2**

Emerging technology _____

Impact _____

_____

_____

_____

_____

[Turn over

14. A laminator is used to cover a sheet of paper in a plastic sleeve.

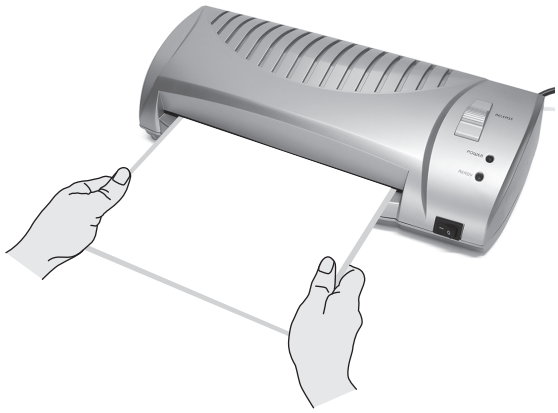

The plastic sleeve is heated by the laminator as it passes through.

The circuit used to indicate when the laminator is at the correct temperature is shown below.

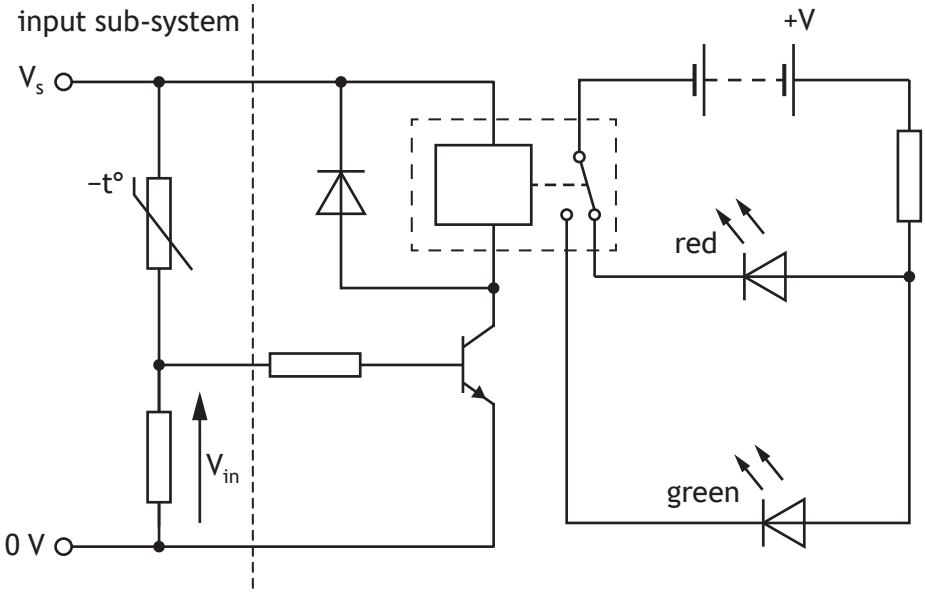

(a) Describe the operation of the **input sub-system** as the temperature increases. Make reference to the resistance of the thermistor and the voltage V_{in}. **2**

As the temperature increases . . .

14. (continued)

The input sub-system is shown below.

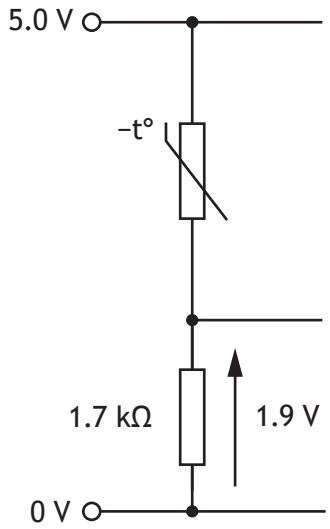

(b) Calculate the resistance of the thermistor for the condition shown above. **4**

(c) Describe, with reference to the circuit shown **opposite**, the effect on the red LED and the green LED when the transistor first activates the relay. **2**

When the transistor activates the relay . . .

* X 8 2 3 7 5 0 1 3 3 *

14. (continued)

A possible modification to the circuit is to include an audible alert when the laminator is at the correct temperature.

(d) Draw, in the circuit below, the symbol for a buzzer connected in **parallel** with the green LED. **2**

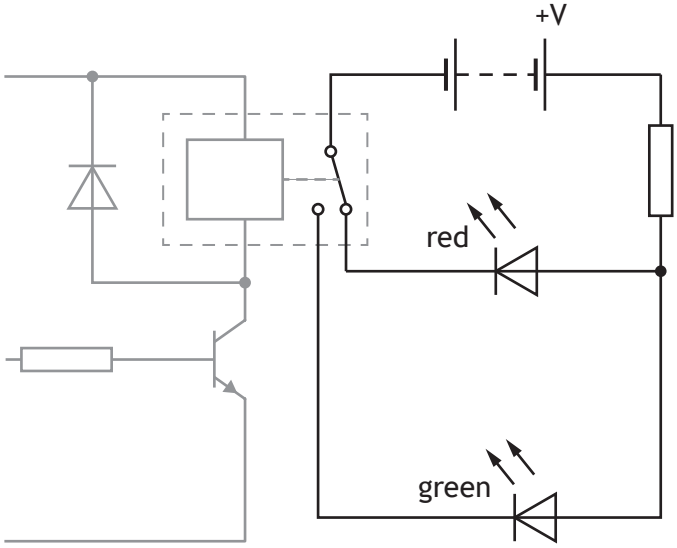

MARKS | DO NOT WRITE IN THIS MARGIN

14. (continued)

An electronic engineer used computer simulation to test the modified circuit.

(e) Describe an advantage of using computer simulation compared to building a circuit for testing purposes. **1**

A large reduction in speed is required for a feed roller to slowly move the plastic sleeve and paper through the laminator.

(f) Explain why a compound gear train is more suitable than a simple gear train to create this large reduction in speed in the laminator. **2**

[END OF QUESTION PAPER]

MARKS | DO NOT WRITE IN THIS MARGIN

ADDITIONAL SPACE FOR ANSWERS

X823750136

MARKS | DO NOT WRITE IN THIS MARGIN

ADDITIONAL SPACE FOR ANSWERS

X823750137

[BLANK PAGE]

DO NOT WRITE ON THIS PAGE

[BLANK PAGE]

DO NOT WRITE ON THIS PAGE

X823750139

[BLANK PAGE]

DO NOT WRITE ON THIS PAGE

Acknowledgement of copyright

Question 6	Cordless drill: doomu/shutterstock.com
Question 9	Bottle machine: Alexander Tolstykh/shutterstock.com
Question 11	Coaster: ELEPHOTOS/shutterstock.com
Question 12	Washing machine: AmaPhoto/shutterstock.com
Question 13	Harvester: Adazhiy Dmytro/shutterstock.com
Question 14	Laminator: Anton Starikov/shutterstock.com

X823750140